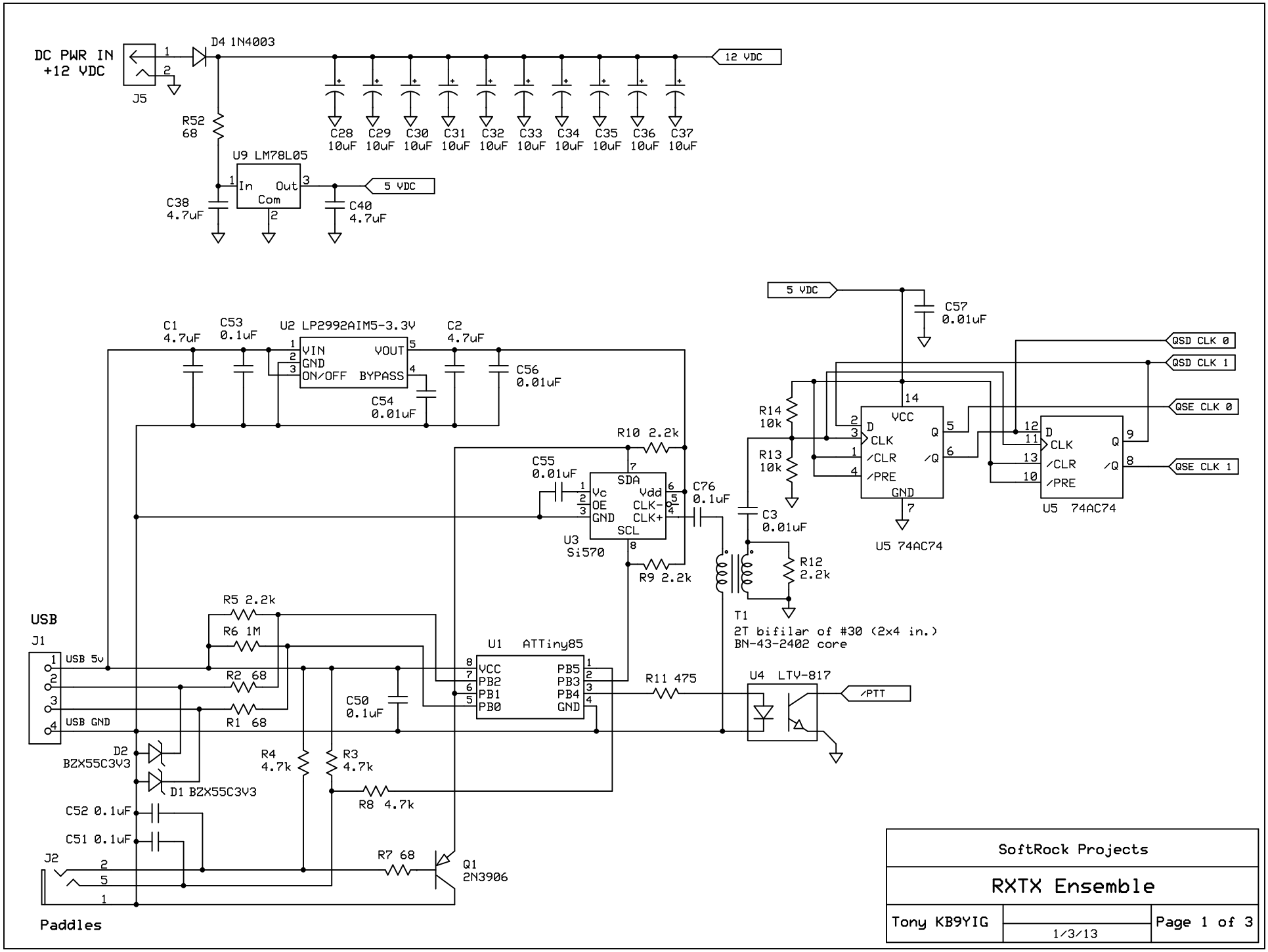
DC PWR IN
+12 VDC
J5
D4 1N4003
12 VDC
R52
68
C28 10uF
C29 10uF
C30 10uF
C31 10uF
C32 10uF
C33 10uF
C34 10uF
C35 10uF
C36 10uF
C37 10uF
U9 LM78L05
In
Out
Com
5 VDC
C38
4.7uF
C40
4.7uF
C1
4.7uF
C53
0.1uF
U2 LP2992AIM5-3.3V
VIN
GND
ON/OFF
VOUT
BYPASS
C54
0.01uF
C2
4.7uF
C56
0.01uF
5 VDC
C57
0.01uF
QSD CLK 0
QSD CLK 1
QSE CLK 0
QSE CLK 1
R14
10k
R13
10k
VCC
D
CLK
/CLR
/PRE
Q
/Q
GND
U5 74AC74
U5 74AC74
R10 2.2k
C55
0.01uF
SDA
Vc
OE
GND
Vdd
CLK-
CLK+
SCL
U3
Si570
C76
0.1uF
C3
0.01uF
R12
2.2k
R9 2.2k
T1
2T bifilar of #30 (2x4 in.)
BN-43-2402 core
USB
J1
USB 5v
USB GND
R5 2.2k
R6 1M
R2 68
R1 68
U1 ATTiny85
VCC
PB2
PB1
PB0
PB5
PB3
PB4
GND
C50
0.1uF
R11 475
U4 LTV-817
/PTT
D2
BZX55C3V3
D1 BZX55C3V3
R4
4.7k
R3
4.7k
R8 4.7k
C52 0.1uF
C51 0.1uF
J2
R7 68
Q1
2N3906
Paddles
SoftRock Projects
RXTX Ensemble
Tony KB9YIG
1/3/13
Page 1 of 3